Project Name		Product Code	
Job Location		Date	
Notes			

SSSE — SQUARE STRAIGHT STEEL EMBEDDED POLE

SPECIFICATIONS

POLE SHAFT
The pole shaft is fabricated from hot rolled welded steel tubing of one-piece construction with a minimum yield strength of 55 KSI. Wall thickness available in 11 gauge (.120˝) or 7 gauge (.180˝).

EMBED AND DIRECT BURIAL DETAIL
Designed for durability and stability, the bottom of the embedded pole section includes welded aluminum wings to prevent rotation and ensure secure placement. Wire access holes are conveniently located 24 inches below the ground line for easy installation and maintenance. Due to varying soil conditions at different sites, it is essential that foundation requirements be assessed by a qualified Structural Engineer familiar with the specific soil characteristics of the job site. This ensures optimal performance and longevity of the installation.

POLE TOP
Options include tenon top, drilled for side mount fixtures, and a removable pole cap is provided.

HAND HOLE
A reinforced hand hole with grounding provision is provided at 18" from the base on side A. Every hand hole includes a cover and cover attachment hardware. The hand hole has a nominal dimension of 3" x 5".

FINISH/COLOR
Exterior of pole is protected by powder-coated over galvanization finish. Below-grade pole is protected by asphaltum coating. Standard finish are Black, Dark Bronze, Silver Gray, and White. Premium finish are Pine Green, and Corten Brown.

POLE LENGTH
Poles are Available in Standard Lengths as Shown in the Order Matrix. Poles can be Custom Cut to Order. Consult Factory.

MOUNTING OPTIONS
See mounting options specification for available adapters, brackets, and bullhorns.

WARRANTY
Structural warranty of five (5) years and a finish/paint warranty of three (3) years.

Pole Cap and Pre-Drilled Four Sides with Plugs

Hand Hole Cover with locking bar

Below-grade asphaltum coating with Wire access slots

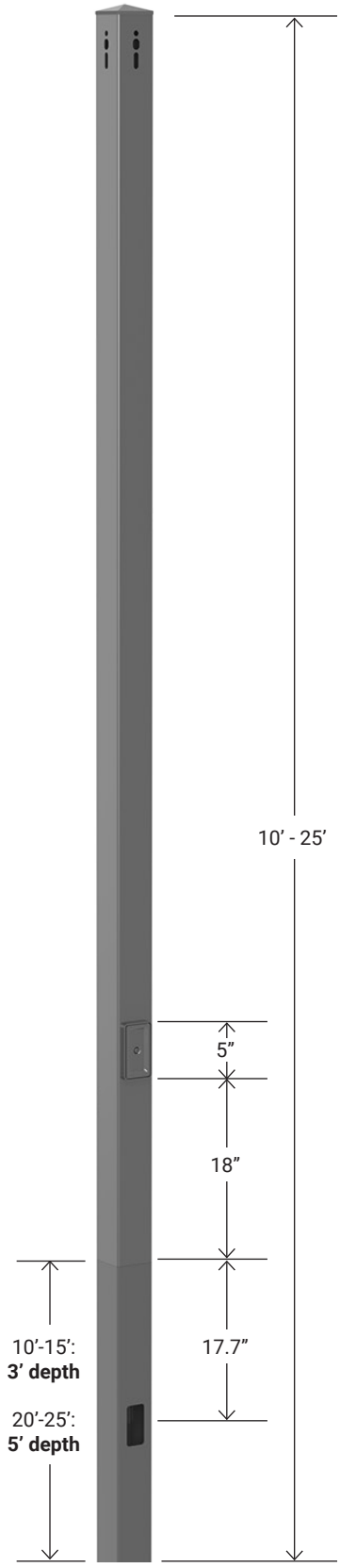

STANDARD COLOR

Black | Dark Bronze | Silver Gray | White

PREMIUM COLOR

Pine Green | Corten Brown

All Rights Reserved • 8312 Allport Ave., Santa Fe Springs, CA 90670 • WWW.LUXFORMTECH.COM • E-mail: info@luxformtech.com

Project Name		Product Code	
Job Location		Date	
Notes			

SSSE — SQUARE STRAIGHT STEEL EMBEDDED POLE

ORDERING SAMPLE: SSSE-10-411-D4-BC-BK

SSSA				
Pole Type	Height	Pole Size/Gauge	Mounting	Color
SSSE Square Straight Steel Embedded	**10 -** 10′ **15 -** 15′ **20 -** 20′ **25 -** 25′	**411 -** 4″ / 11 gauge	**D4 -** Pre-drilled 4 sides with plugs	**BK** - Black **DB** - Dark Bronze **SG** - Silver Gray **WH** - White **PG** - Pine Green* **CB** - Corten Brown* **Premium color*

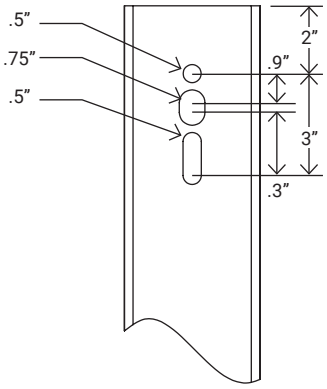

Pre-drilled measurements

NOTES

1. Side Drilled poles include UV-stabilized polycarbonate pole cap.
2. Cut to order poles can be side drilled for 2@180º or 4@90º, includes UV stabilized polycarbonate top cover and hole plugs for unused drilling locations.
3. Cut to order poles may also be ordered with 2⅜˝ OD or 2⅞˝ OD tenons for use with post top decorative luminaires, flood/area slip fitter fixtures, or any of a wide variety of pole top mounting accessories.

All Rights Reserved • 8312 Allport Ave., Santa Fe Springs, CA 90670 • WWW.LUXFORMTECH.COM • E-mail: info@luxformtech.com

Project Name		Product Code	
Job Location		Date	
Notes			

SSSE **SQUARE STRAIGHT STEEL EMBEDDED POLE**

WIND MAP

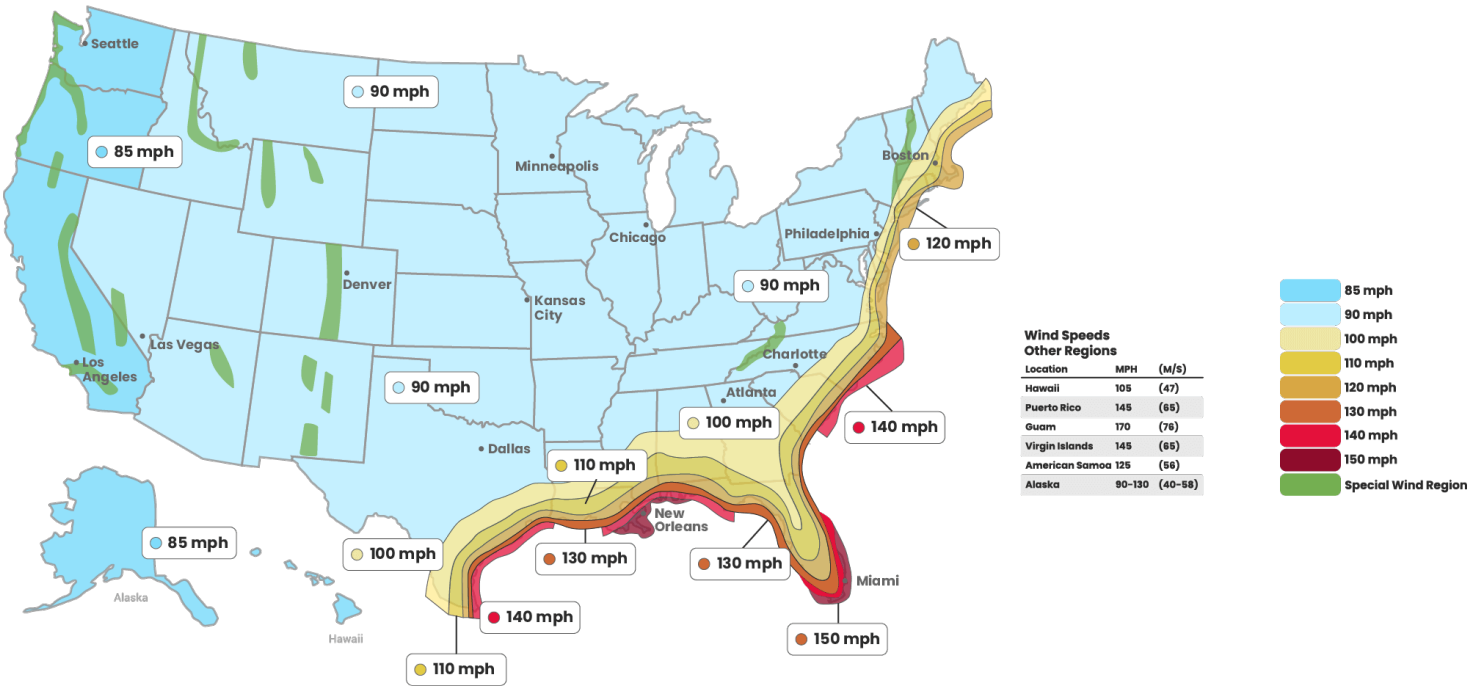

ASCE 7-05 WIND MAP EPA LOAD RATING - 3 SECOND GUST WIND

Cat. No.	Weight (lbs)	Total Luminaire Weight (lbs)	90 MPH (ft^2)	100 MPH (ft^2)	110 MPH (ft^2)	120 MPH (ft^2)	130 MPH (ft^2)	140 MPH (ft^2)
SSSE-10-411	95	320	25.2	20.0	18.6	15.3	12.7	10.6
SSSE-15-411	130	245	15.5	11.9	10.9	8.6	6.8	5.4
SSSE-20-411	160	200	9.1	6.5	5.8	4.2	2.9	1.9
SSSE-25-411	195	200	4.7	2.8	2.2	1.0	NR	NR

LUXFORM provides this information as a guide only and assumes no liability for its use. Allowable pole EPA for job site wind conditions must be equal to or greater than fixture mount EPA. Responsibility lies with the specifier for the correct pole selection based on A.N.S.I. wind map and job location.

NOTES

1. Maximum EPA (Effective Projected Area) are based on AASHTO 2013 (90-150MPH) and ASCE 7-05
2. Maximum EPA (Effective Projected Area) and weight values are based on side mounted fixtures only. Consult factory on loading criteria for pole top mounted luminaires and/or brackets. Variations from sizes above are available upon inquiry at the factory. Satisfactory performance of poles is dependent upon the pole being properly attached to a supporting foundation of adequate design.
3. Structure weight is a nominal value which includes the pole shaft and base plate only.
4. Variations from sizes above are available upon inquiry at the factory.
5. Satisfactory performance of poles is dependent upon the pole being properly attached to a supporting foundation of adequate design.

All Rights Reserved • 8312 Allport Ave., Santa Fe Springs, CA 90670 • WWW.LUXFORMTECH.COM • E-mail: info@luxformtech.com

Project Name		Product Code	
Job Location		Date	
Notes			

SSSE **SQUARE STRAIGHT STEEL EMBEDDED POLE**

WIND MAP FOR FLORIDA

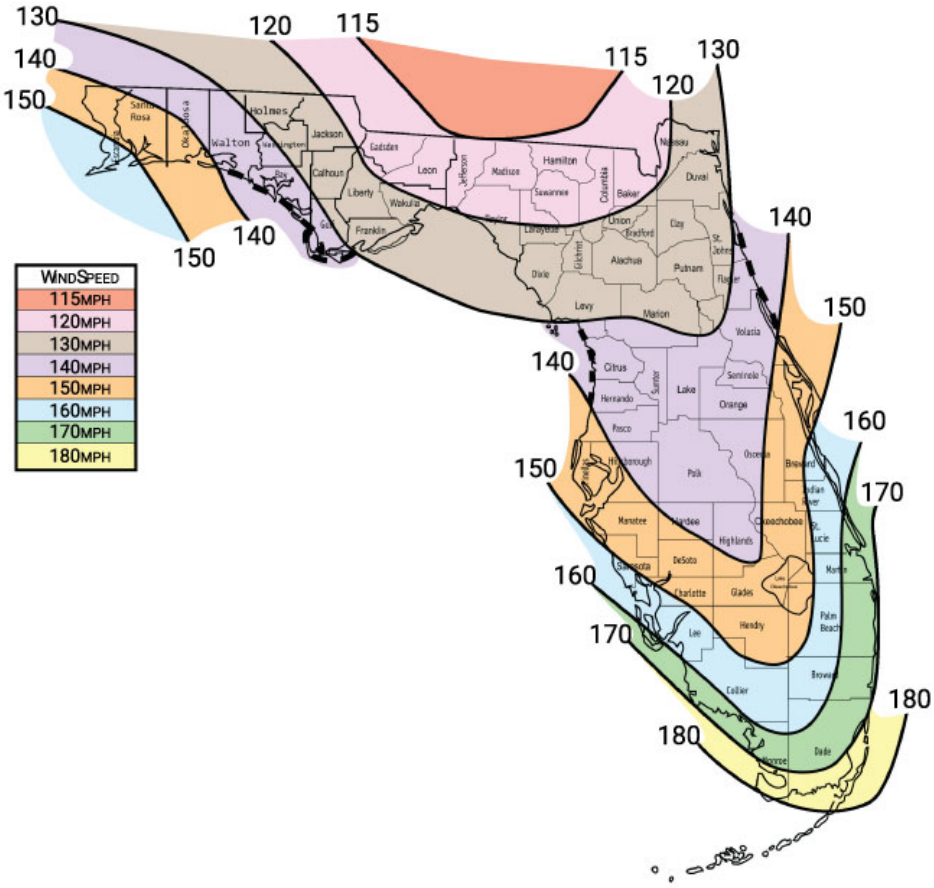

FBC 2023 / ASCE 7-10 WIND MAP EPA LOAD RATING - ULTIMATE 3 SECOND GUST WIND									
Cat. No.	Weight (lbs)	Total Luminaire Weight (lbs)	120 MPH (ft^2)	130 MPH (ft^2)	140 MPH (ft^2)	150 MPH (ft^2)	160 MPH (ft^2)	170 MPH (ft^2)	180 MPH (ft^2)
SSSE-10-411	95	300	21.4	17.9	15.0	12.8	10.9	9.3	8.1
SSSE-15-411	130	295	12.3	9.8	7.9	6.4	5.1	4.0	3.2
SSSE-20-411	160	165	6.9	5.1	3.7	2.5	1.6	0.8	NR

LUXFORM provides this information as a guide only and assumes no liability for its use. Allowable pole EPA for job site wind conditions must be equal to or greater than fixture mount EPA. Responsibility lies with the specifier for the correct pole selection based on A.N.S.I. wind map and job location.

NOTES
1. Values are ultimate design 3-second gust wind speeds in miles per hour at 33 ft. above ground for Exposure C category.
2. Linear interpolation between contours is permitted.
3. Islands and coastal areas outside the last contour shall use the last wind speed contour of the coastal area.
4. Mountainous terrain, gorges, ocean promontories, and special wind regions shall be examined for unusual wind conditions.
5. Wind speeds correspond to approximately a 7% probability of exceedance in 50 years (Annual Exceedance Probability = 0.00143, MRI = 700 years).

Figure 1609.3(1) Ultimate Design Wind Speeds, VULT, For Risk Category II Buildings And Other Structures

All Rights Reserved • 8312 Allport Ave., Santa Fe Springs, CA 90670 • WWW.LUXFORMTECH.COM • E-mail: info@luxformtech.com

INSTALLATION

Here is a high-level description of the installation of our structures. It is important to note this is not a comprehensive installation guide, and installation contractors must be relied upon for equipment and practices that meet the conditions of each job location. LUXFORM Inc. is not responsible for any damage that occurs during or after installation, or for any structure that has been modified by the purchaser or used in a way other than our application recommendations.

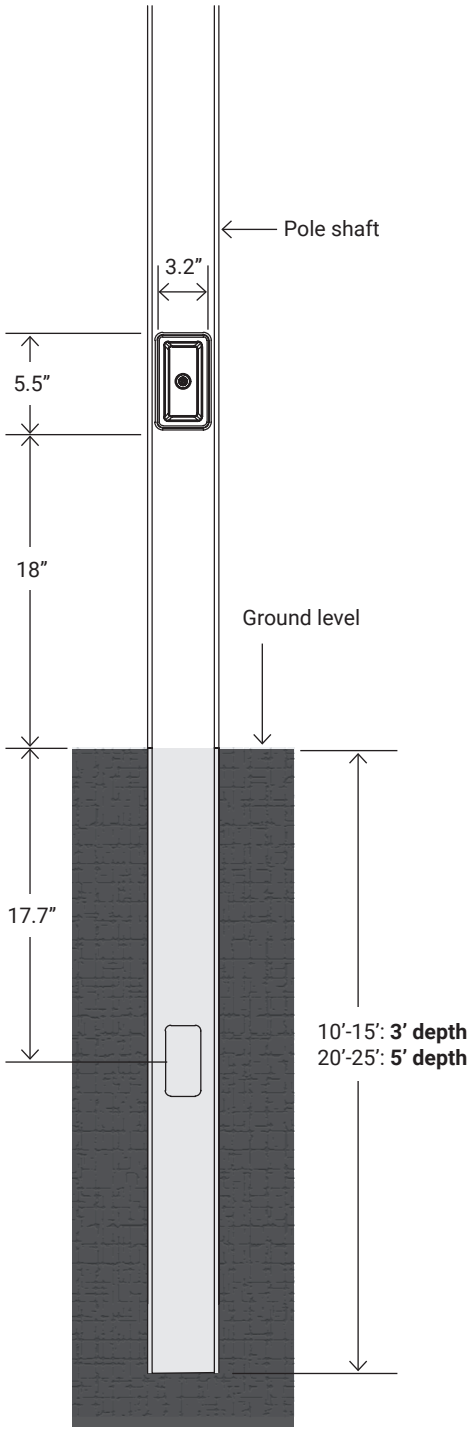

Special care should be taken to confer with the customer and local structural engineer to verify if any special installation requirements are needed due to local soil conditions and/or electrical requirements.

On embedded structures, typically the bottom section of the pole is installed first. The foundation site excavation should allow for the designed embedded length of the bottom shaft (per the cut sheets) as well as the diameter requirements for sufficient concrete or gravel backfill to withstand the maximum reactions that might be applied to the base section. Also, any consideration for electrical requirements should be addressed.

The base section should be marked at the suggested embedded depth and this mark should be ground-line elevation when the bottom section is installed. Care should be taken to make sure the section is vertical before proceeding as there is no adjustment. If space is available and crane capabilities permit, it is typical to assemble the remaining structure on the ground and erect it as a unit. The sections should be aligned on the ground and supported with wood blocks. Make sure that the mating surfaces are kept clean. Care should be taken to make sure the sections are assembled to allow the climbing steps and/or lighting cross arms or platforms to be aligned.

The slip joints should be lubricated with soapy water. When the sections are slipped together, sufficient force should be applied to achieve a tight fit. There should be no significant gaps between the sections at the slip joint, and the entire shaft should be straight. Once the sections are assembled and the fixture brackets are attached, the entire unit may be lifted and installed on the embedded base section. Again, care should be taken to make sure the orientation of the light fixtures is correct and that there is a clean, tight slipfit at the bottom joint.

All Rights Reserved • 8312 Allport Ave., Santa Fe Springs, CA 90670 • WWW.LUXFORMTECH.COM • E-mail: info@luxformtech.com